PHY 711 Classical Mechanics and Mathematical Methods
10-10:50 AM MWF online or (occasionally) in Olin 103

Discussion for Lecture 32: Chap. 9 of F&W

Sound generation and scattering;

non-linear effects

1. **Sound generation**
2. **Sound scattering**
3. **Introduction to non-linear effects**

In this lecture, we will consider traveling wave solutions to the sound wave equations.

27	Mon, 10/26/2020	Chap. 9	Mechanics of 3 dimensional fluids	#18	10/30/2020
28	Wed, 10/28/2020	Chap. 9	Mechanics of 3 dimensional fluids		
29	Fri, 10/30/2020	Chap. 9	Linearized hydrodynamics equations	#19	11/02/2020
30	Mon, 11/02/2020	Chap. 9	Linear sound waves	#20	11/04/2020
31	Wed, 11/04/2020	Chap. 9	Linear sound waves	Project topic	11/06/2020
32	Fri, 11/06/2020	Chap. 9	Sound sources and scattering; Non linear effects		
33	Mon, 11/09/2020	Chap. 9	Non linear effects in sound waves and shocks		
34	Wed, 11/11/2020	Chap. 10	Surface waves in fluids		
35	Fri, 11/13/2020	Chap. 10	Surface waves in fluids; soliton solutions		
36	Mon, 11/16/2020	Chap. 11	Heat conduction		
37	Wed, 11/18/2020	Chap. 12	Viscous effects		
38	Fri, 11/20/2020	Chap. 13	Elasticity		
39	Mon, 11/23/2020		Review		
	Wed, 11/25/2020		Thanksgiving Holidaya		
	Fri, 11/27/2020		Thanksgiving Holidaya		
40	Mon, 11/30/2020		Review		
	Wed, 12/02/2020		Presentations I		
	Fri, 12/04/2020		Presentations II		

Schedule.

Wave equation with source:

$$\nabla^2\Phi - \frac{1}{c^2}\frac{\partial^2\Phi}{\partial t^2} = -f(\mathbf{r},t)$$

Solution in terms of Green's function:

$$\Phi(\mathbf{r},t) = \int d^3r' \int dt' G(\mathbf{r}-\mathbf{r}',t-t') f(\mathbf{r}',t') +$$

boundary contributions, where

$$\left(\nabla^2 - \frac{1}{c^2}\frac{\partial^2}{\partial t^2}\right) G(\mathbf{r}-\mathbf{r}',t-t') = -\delta(\mathbf{r}-\mathbf{r}')\delta(t-t')$$

Now think of wave equation with a source. The Green's function is a very powerful tool for solving these problems. We will use similar techniques in solving the wave equation for electromagnetic waves.

Wave equation with source -- continued:

We can show that :

$$G(\mathbf{r}-\mathbf{r}',t-t') = \frac{\delta\left(t' - \left(t \mp \frac{|\mathbf{r}-\mathbf{r}'|}{c}\right)\right)}{4\pi|\mathbf{r}-\mathbf{r}'|}$$

Result that we will derive.

Derivation of Green's function for wave equation -- continued

$$\text{Define}: \quad \tilde{G}(\mathbf{r},\omega) = \int_{-\infty}^{\infty} G(\mathbf{r},t) e^{i\omega t} dt$$

$$G(\mathbf{r},t) = \frac{1}{2\pi} \int_{-\infty}^{\infty} \tilde{G}(\mathbf{r},\omega) e^{-i\omega t} d\omega$$

$\tilde{G}(\mathbf{r},\omega)$ must satisfy :

$$\left(\nabla^2 + k^2\right)\tilde{G}(\mathbf{r}-\mathbf{r}',\omega) = -\delta(\mathbf{r}-\mathbf{r}') \quad \text{where} \quad k^2 = \frac{\omega^2}{c^2}$$

Spatial equation for Fourier amplitudes.

In our case -- $\tilde{G}(\mathbf{r}-\mathbf{r}',\omega) \Rightarrow \dfrac{e^{ik|\mathbf{r}-\mathbf{r}'|}}{4\pi|\mathbf{r}-\mathbf{r}'|}$

Fourier transform of velocity potential:

$$\tilde{\Phi}(\mathbf{r},\omega) = \int_V \tilde{G}(|\mathbf{r}-\mathbf{r}'|,\omega) f(\mathbf{r}',\omega) d^3r' +$$

Fourier transform of forcing term.

$$\oint_S \underbrace{\left(\tilde{\Phi}(\mathbf{r}',\omega)\nabla\tilde{G}(|\mathbf{r}-\mathbf{r}'|,\omega) - \tilde{G}(|\mathbf{r}-\mathbf{r}'|,\omega)\nabla\tilde{\Phi}(\mathbf{r}',\omega)\right)\cdot\hat{\mathbf{n}}d^2r'}_{\text{extra contributions from boundary}}$$

Derivation continued.

Wave equation with source:

$$\nabla^2\Phi - \frac{1}{c^2}\frac{\partial^2\Phi}{\partial t^2} = -f(\mathbf{r},t)$$

Example:

$f(\mathbf{r},t) \Rightarrow$ time harmonic piston of radius a, amplitude $\varepsilon\hat{\mathbf{z}}$ can be represented as boundary value of $\Phi(\mathbf{r},t)$

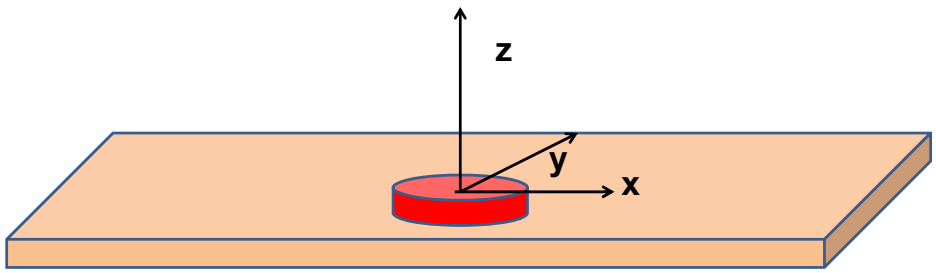

Now consider a simplified model of a sound amplifier where the red cylinder moves up and down in the z direction at a particular frequency omega.

Treatment of boundary values for time-harmonic force:

$$\tilde{\Phi}(\mathbf{r},\omega) = \int_V \tilde{G}\left(|\mathbf{r}-\mathbf{r}'|,\omega\right)\tilde{f}\left(\mathbf{r}',\omega\right)d^3r' +$$

$$\oint_S \left(\tilde{\Phi}(\mathbf{r}',\omega)\nabla'\tilde{G}\left(|\mathbf{r}-\mathbf{r}'|,\omega\right) - \tilde{G}\left(|\mathbf{r}-\mathbf{r}'|,\omega\right)\nabla'\tilde{\Phi}(\mathbf{r}',\omega)\right)\cdot\hat{\mathbf{n}}d^2r'$$

Boundary values for our example: In this case $\tilde{f}(\mathbf{r},\omega) = 0$

$$\left(\frac{\partial\tilde{\Phi}}{\partial z}\right)_{z=0} = \begin{cases} 0 & \text{for } x^2+y^2 > a^2 \\ i\omega\varepsilon a & \text{for } x^2+y^2 < a^2 \end{cases}$$

Note: Need Green's function with vanishing gradient at $z = 0$:

$$\tilde{G}\left(|\mathbf{r}-\mathbf{r}'|,\omega\right) = \frac{e^{ik|\mathbf{r}-\mathbf{r}'|}}{4\pi|\mathbf{r}-\mathbf{r}'|} + \frac{e^{ik|\mathbf{r}-\bar{\mathbf{r}}'|}}{4\pi|\mathbf{r}-\bar{\mathbf{r}}'|} \qquad \text{where } \bar{z}' = -z'; \quad z > 0$$

In this case, we need to use a modified Green's function to satisfy the boundary condition at z=0.

$$\widetilde{\Phi}(\mathbf{r},\omega) = -\oint_{S:\, z'=0} \widetilde{G}\left(\left|\mathbf{r}-\mathbf{r}'\right|,\omega\right)\frac{\partial\widetilde{\Phi}(\mathbf{r}',\omega)}{\partial z}dx'\,dy'$$

$$\widetilde{G}\left(\left|\mathbf{r}-\mathbf{r}'\right|,\omega\right) = \frac{e^{ik\left|\mathbf{r}-\mathbf{r}'\right|}}{4\pi\left|\mathbf{r}-\mathbf{r}'\right|} + \frac{e^{ik\left|\mathbf{r}-\bar{\mathbf{r}}'\right|}}{4\pi\left|\mathbf{r}-\bar{\mathbf{r}}'\right|} \qquad \text{where } \bar{z}' = -z';\quad z>0$$

$$\widetilde{G}\left(\left|\mathbf{r}-\mathbf{r}'\right|,\omega\right)_{z'=0} = \left.\frac{e^{ik\left|\mathbf{r}-\mathbf{r}'\right|}}{2\pi\left|\mathbf{r}-\mathbf{r}'\right|}\right|_{z'=0};\quad z>0$$

Some details.

$$\widetilde{\Phi}(\mathbf{r},\omega) = -\oint_{S:\, z'=0} \widetilde{G}\left(\left|\mathbf{r}-\mathbf{r}'\right|,\omega\right)\frac{\partial\widetilde{\Phi}(\mathbf{r}',\omega)}{\partial z}dx'\,dy'$$

$$= -i\omega\varepsilon a\int_0^a r'\,dr'\int_0^{2\pi} d\phi'\left.\frac{e^{ik|\mathbf{r}-\mathbf{r}'|}}{2\pi\left|\mathbf{r}-\mathbf{r}'\right|}\right|_{z'=0}$$

Integration domain: $x' = r'\cos\varphi'$

$y' = r'\sin\varphi'$

For $r >> a$; $\left|\mathbf{r}-\mathbf{r}'\right| \approx r - \hat{\mathbf{r}}\cdot\mathbf{r}'$

Assume $\hat{\mathbf{r}}$ is in the yz plane; $\varphi = \frac{\pi}{2}$

$$\hat{\mathbf{r}} = \sin\theta\hat{\mathbf{y}} + \cos\theta\hat{\mathbf{z}}$$

$$\left|\mathbf{r}-\mathbf{r}'\right| \approx r - \hat{\mathbf{r}}\cdot\mathbf{r}' = r - r'\sin\theta\sin\varphi'$$

Changing to more convenient coordinates. Preparing to evaluate the expression far from the moving piston.

$$\tilde{\Phi}(\mathbf{r},\omega) = -\frac{i\omega\varepsilon a}{2\pi}\frac{e^{ikr}}{r}\int_0^a r'dr'\int_0^{2\pi} d\phi' e^{-ikr'\sin\theta\sin\phi'}$$

Note that : $\frac{1}{2\pi}\int_0^{2\pi} d\phi' e^{-iu\sin\phi'} = J_0(u)$ From integral from of Bessel functions.

$$\Rightarrow \tilde{\Phi}(\mathbf{r},\omega) = -i\omega\varepsilon a\frac{e^{ikr}}{r}\int_0^a r'dr' J_0(kr'\sin\theta)$$

$\int_0^w u du J_0(u) = wJ_1(w)$ Another Bessel function identity.

$$\Rightarrow \tilde{\Phi}(\mathbf{r},\omega) = -i\omega\varepsilon a^3\frac{e^{ikr}}{r}\frac{J_1(ka\sin\theta)}{ka\sin\theta}$$

Analytic result for r→∞

Approximate solution continued. In this approximation, the integral can be evaluated in terms of Bessel functions.

Energy flux : $\mathbf{j}_e = \delta\mathbf{v}p$

Taking time average : $\langle \mathbf{j}_e \rangle = \frac{1}{2}\Re\left(\delta\mathbf{v}p^*\right)$

$$= \tfrac{1}{2}\rho_0\Re\left((-\nabla\Phi)(-i\omega\Phi)^*\right)$$

Time averaged power per solid angle :

$$\left\langle \frac{dP}{d\Omega} \right\rangle = \langle \mathbf{j}_e \rangle \cdot \hat{\mathbf{r}} r^2 = \frac{1}{2}\rho_0 \varepsilon^2 c^3 k^4 a^6 \left| \frac{J_1(ka\sin\theta)}{ka\sin\theta} \right|^2$$

Estimating the power of the sound wave in this asymptotic regime.

Time averaged power per solid angle :

$$\left\langle \frac{dP}{d\Omega} \right\rangle = \langle \mathbf{j}_e \rangle \cdot \hat{\mathbf{r}} r^2 = \frac{1}{2} \rho_0 \varepsilon^2 c^3 k^4 a^6 \left| \frac{J_1(ka \sin\theta)}{ka \sin\theta} \right|^2$$

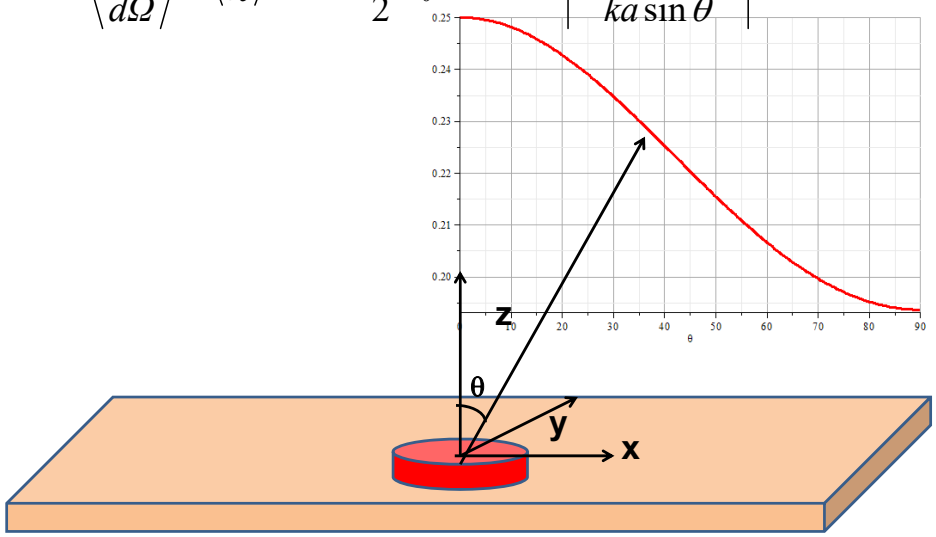

Graph of the power as a function of the polar angle theta.

Scattering of sound waves –
for example, from a rigid cylinder

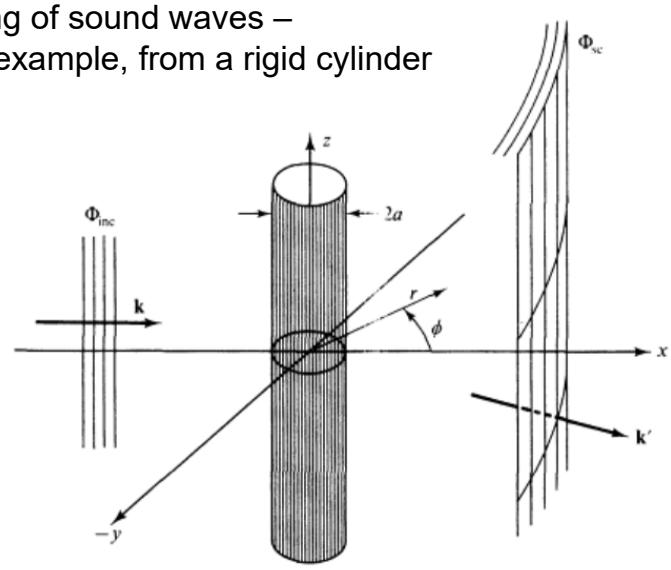

Figure 51.8 Scattering from a rigid cylinder.

Figure from Fetter and Walecka pg. 337

Now consider the case of a plane wave of sound, scattering off of a cylindrical object. Can you think of a physical situation for this model?

Scattering of sound waves –
for example, from a rigid cylinder

Velocity potential --

$$\Phi(\mathbf{r}) = \Phi_{inc}(\mathbf{r}) + \Phi_{sc}(\mathbf{r}) \qquad \Phi_{inc}(\mathbf{r}) = e^{i\mathbf{k}\cdot\mathbf{r}}$$

Helmholz equation in cylindrical coordinates:

$$\left(\nabla^2 + k^2\right)\Phi(\mathbf{r}) = 0 = \left(\frac{1}{r}\frac{\partial}{\partial r} r \frac{\partial}{\partial r} + \frac{1}{r^2}\frac{\partial}{\partial \phi^2} + \frac{\partial}{\partial z^2} + k^2\right)\Phi(\mathbf{r})$$

Assume: $\Phi(\mathbf{r}) = \sum_{m=-\infty}^{\infty} e^{im\phi} R_m(r)$

where $$\left(\frac{d^2}{dr^2} + \frac{1}{r}\frac{d}{dr} - \frac{m^2}{r^2} + k^2\right) R_m(r) = 0$$

Analysis of the scattering wave using cylindrical coordinates.

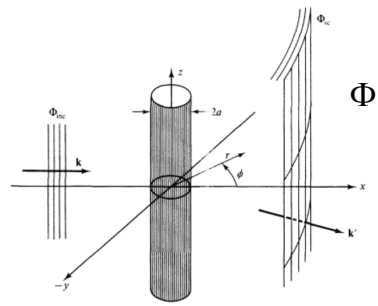

Figure 51.8 Scattering from a rigid cylinder.

$$\Phi_{inc}(\mathbf{r}) = e^{i\mathbf{k}\cdot\mathbf{r}} = e^{ikr\cos\phi} = \sum_{m=-\infty}^{\infty} i^m e^{im\phi} J_m(kr)$$

$$\Phi_{sc}(\mathbf{r}) = \sum_{m=-\infty}^{\infty} C_m e^{im\phi} H_m(kr) \quad \text{where Hankel function}$$

represents an outgoing wave: $H_m(kr) = J_m(kr) + iN_m(kr)$

Boundary condition at $r = a$: $\left.\dfrac{\partial\Phi}{\partial r}\right|_{r=a} = 0$

$$\Rightarrow i^m J'_m(ka) + C_m H'_m(ka) = 0 \qquad C_m = -i^m \frac{J'_m(ka)}{H'_m(ka)}$$

In this case we expect a cylindrical wave that can be represented in terms of Bessel and Neumann functions, or more conveniently in terms of Hankel functions H. Satisfying the boundary values on the surface of the scattering cylinder, we find the coefficients of the expression.

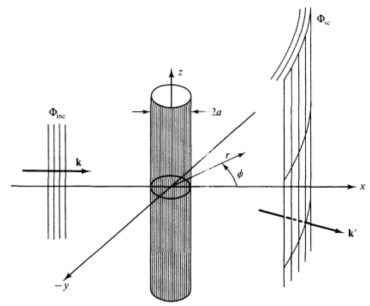

Figure 51.8 Scattering from a rigid cylinder.

$$\Phi_{sc}(\mathbf{r}) = -\sum_{m=-\infty}^{\infty} i^m \frac{J'_m(ka)}{H'_m(ka)} e^{im\phi} H_m(kr)$$

Asymptotic form:

$$i^m H_m(kr) \underset{kr\to\infty}{\approx} \sqrt{\frac{2}{\pi kr}} e^{i(kr-\pi/4)}$$

$$\Phi_{sc}(\mathbf{r}) \underset{kr\to\infty}{\approx} f(\phi)\sqrt{\frac{1}{r}} e^{ikr} = -\sum_{m=-\infty}^{\infty} \frac{J'_m(ka)}{H'_m(ka)} e^{im\phi} \sqrt{\frac{2}{\pi kr}} e^{i(kr-\pi/4)}$$

$$\Rightarrow f(\phi) = -\sqrt{\frac{2}{\pi k}} \sum_{m=-\infty}^{\infty} \frac{J'_m(ka)}{H'_m(ka)} e^{i(m\phi-\pi/4)}$$

Using the asymptotic form of the Hankel functions we can analyze the results further.

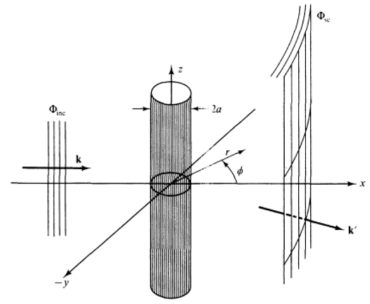

Figure 51.8 Scattering from a rigid cylinder.

$$\frac{d\sigma}{d\phi} = \left| f(\phi) \right|^2$$

$$f(\phi) = -\sqrt{\frac{2}{\pi k}} \sum_{m=-\infty}^{\infty} \frac{J'_m(ka)}{H'_m(ka)} e^{i(m\phi - \pi/4)}$$

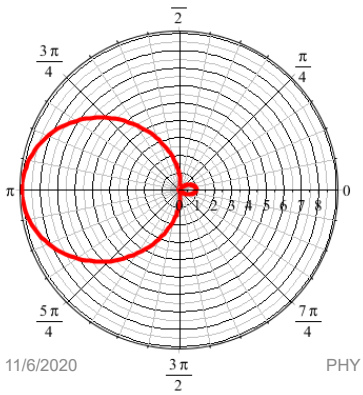

For *ka << 1*

$$\frac{d\sigma}{d\phi} = \left| f(\phi) \right|^2 \approx \frac{1}{8} \pi k^3 a^4 \left(1 - 2\cos\phi\right)^2$$

Defining the appropriate scattering cross section, we can analyze the results further. For ka<<1 (long wavelengths, low frequencies) we find that most of the sound is scattered backwards from the propagation direction.

Now consider some non-linear effects

Effects of nonlinearities in fluid equations
-- one dimensional case

Newton - Euler equation of motion :

$$\frac{\partial \mathbf{v}}{\partial t} + (\mathbf{v} \cdot \nabla)\mathbf{v} = \mathbf{f}_{applied} - \frac{\nabla p}{\rho}$$

Continuity equation : $\frac{\partial \rho}{\partial t} + \nabla \cdot (\rho \mathbf{v}) = 0$

Assume spatial variation confined to x direction ;

assume that $\mathbf{v} = v\hat{\mathbf{x}}$ and $\mathbf{f}_{applied} = 0.$

$$\frac{\partial v}{\partial t} + v\frac{\partial v}{\partial x} = -\frac{1}{\rho}\frac{\partial p}{\partial x}$$

$$\frac{\partial \rho}{\partial t} + v\frac{\partial \rho}{\partial x} + \rho\frac{\partial v}{\partial x} = 0$$

Review of basic equations, specializing in one spatial dimension.

$$\frac{\partial v}{\partial t} + v\frac{\partial v}{\partial x} + \frac{1}{\rho}\frac{\partial p}{\partial x} = 0$$

$$\frac{\partial \rho}{\partial t} + v\frac{\partial \rho}{\partial x} + \rho\frac{\partial v}{\partial x} = 0$$

Expressing p in terms of ρ: $\quad p = p(\rho)$

$$\frac{\partial p}{\partial x} = \frac{\partial p}{\partial \rho}\frac{\partial \rho}{\partial x} \equiv c^2(\rho)\frac{\partial \rho}{\partial x} \qquad \text{where} \quad \frac{\partial p}{\partial \rho} \equiv c^2(\rho)$$

For adiabatic ideal gas: $\quad \dfrac{dp}{p} = \gamma\dfrac{d\rho}{\rho} \qquad p = p_0\left(\dfrac{\rho}{\rho_0}\right)^{\gamma}$

$$c^2(\rho) = \frac{\gamma p}{\rho} = c_0^2\left(\frac{\rho}{\rho_0}\right)^{\gamma-1} \qquad \text{where} \quad c_0^2 \equiv \frac{\gamma p_0}{\rho_0}$$

Decoupling the variables.

$$\frac{\partial v}{\partial t} + v\frac{\partial v}{\partial x} + \frac{c^2(\rho)}{\rho}\frac{\partial \rho}{\partial x} = 0$$

$$\frac{\partial \rho}{\partial t} + v\frac{\partial \rho}{\partial x} + \rho\frac{\partial v}{\partial x} = 0$$

Expressing variation of v in terms of $v(\rho)$:

$$\frac{\partial v}{\partial \rho}\frac{\partial \rho}{\partial t} + v\frac{\partial v}{\partial \rho}\frac{\partial \rho}{\partial x} + \frac{c^2(\rho)}{\rho}\frac{\partial \rho}{\partial x} = 0$$

$$\frac{\partial \rho}{\partial t} + v\frac{\partial \rho}{\partial x} + \rho\frac{\partial v}{\partial \rho}\frac{\partial \rho}{\partial x} = 0$$

More analysis.

Some more algebra :

From Euler equation : $\frac{\partial v}{\partial \rho}\left(\frac{\partial \rho}{\partial t}+v\frac{\partial \rho}{\partial x}\right)+\frac{c^2(\rho)}{\rho}\frac{\partial \rho}{\partial x}=0$

From continuity equation : $\frac{\partial \rho}{\partial t}+v\frac{\partial \rho}{\partial x}=-\rho\frac{\partial v}{\partial \rho}\frac{\partial \rho}{\partial x}$

Combined equation : $\frac{\partial v}{\partial \rho}\left(-\rho\frac{\partial v}{\partial \rho}\frac{\partial \rho}{\partial x}\right)+\frac{c^2(\rho)}{\rho}\frac{\partial \rho}{\partial x}=0$

$$\Rightarrow\left(\frac{\partial v}{\partial \rho}\right)^2=\frac{c^2(\rho)}{\rho^2} \qquad \frac{\partial v}{\partial \rho}=\pm\frac{c}{\rho}$$

$$\Rightarrow\frac{\partial \rho}{\partial t}+(v\pm c)\frac{\partial \rho}{\partial x}=0$$

Further derivations.

Assuming adiabatic process : $c^2 = c_0^2 \left(\frac{\rho}{\rho_0} \right)^{\gamma - 1}$ $\quad c_0^2 = \frac{\gamma p_0}{\rho_0}$

$$\frac{\partial v}{\partial \rho} = \frac{dv}{d\rho} = \pm \frac{c}{\rho} \qquad \Rightarrow v = \pm c_0 \int_{\rho_0}^{\rho} \left(\frac{\rho'}{\rho_0} \right)^{(\gamma-1)/2} \frac{d\rho'}{\rho'}$$

$$\Rightarrow v = \pm \frac{2c_0}{\gamma - 1} \left(\left(\frac{\rho}{\rho_0} \right)^{(\gamma-1)/2} - 1 \right)$$

$$\Rightarrow c = c_0 \left(\frac{\rho}{\rho_0} \right)^{(\gamma-1)/2}$$

Using adiabatic relationships.

Summary:

$$\frac{dv}{d\rho} = \pm \frac{c}{\rho}$$

$$\frac{\partial \rho}{\partial t} + (v \pm c)\frac{\partial \rho}{\partial x} = 0$$

Assuming adiabatic process: $c^2 = c_0^2 \left(\frac{\rho}{\rho_0} \right)^{\gamma - 1}$ $\quad c_0^2 = \frac{\gamma p_0}{\rho_0}$

$$c = c_0 \left(\frac{\rho}{\rho_0} \right)^{(\gamma-1)/2} \qquad v = \pm \frac{2c_0}{\gamma - 1} \left(\left(\frac{\rho}{\rho_0} \right)^{(\gamma-1)/2} - 1 \right)$$

Analysis of fluid velocity from a knowledge of the wave velocity.

Traveling wave solution:

$$\text{Assume:} \quad \rho = \rho_0 + f(x - u(\rho)t)$$

Need to find self - consistent equations for propagation velocity $u(\rho)$ using equations

$$\text{From previous derivations:} \quad \frac{\partial \rho}{\partial t} + (v \pm c)\frac{\partial \rho}{\partial x} = 0$$

$$\text{Apparently:} \quad u(\rho) \Leftrightarrow v \pm c$$

For adiabatic ideal gas and + signs:

$$u = v + c = c_0\left(\frac{\gamma+1}{\gamma-1}\left(\frac{\rho}{\rho_0}\right)^{(\gamma-1)/2} - \frac{2}{\gamma-1}\right)$$

Analysis for a traveling wave.

Traveling wave solution -- continued:

$$\frac{\partial \rho}{\partial t} + (v \pm c)\frac{\partial \rho}{\partial x} = 0$$

$$\text{Assume:} \quad \rho = \rho_0 + f(x - u(\rho)t) = \rho_0 + f(x - (v \pm c)t)$$

For adiabatic ideal gas and + signs:

$$u = v + c = c_0\left(\frac{\gamma+1}{\gamma-1}\left(\frac{\rho}{\rho_0}\right)^{(\gamma-1)/2} - \frac{2}{\gamma-1}\right)$$

Solution in linear approxiation:

$$u = v + c \approx v_0 + c_0 = c_0\left(\frac{\gamma+1}{\gamma-1} - \frac{2}{\gamma-1}\right) = c_0$$

$$\Rightarrow \rho = \rho_0 + f(x - c_0 t)$$

Checking the linear result

Traveling wave solution -- full non-linear case:

Visualization for particular waveform: $\rho = \rho_0 + f(\underbrace{x - u(\rho)t}_{w})$

Assume: $f(w) \equiv \rho_0 s(w)$

$$\frac{\rho}{\rho_0} = 1 + s(x - ut)$$

For adiabatic ideal gas:

$$u = c_0 \left(\frac{\gamma+1}{\gamma-1} \left(\frac{\rho}{\rho_0} \right)^{(\gamma-1)/2} - \frac{2}{\gamma-1} \right)$$

$$u = c_0 \left(\frac{\gamma+1}{\gamma-1} \left(1 + s(x - ut)\right)^{(\gamma-1)/2} - \frac{2}{\gamma-1} \right)$$

Analysis of how to visualize the traveling wave solution.

Visualization continued:

$$u = c_0\left(\frac{\gamma+1}{\gamma-1}\left(1+s(x-ut)\right)^{(\gamma-1)/2} - \frac{2}{\gamma-1}\right)$$

Plot $s(x-ut)$ for fixed t, as a function of x:

Let $w = x - ut$

$$x = w + ut = w + u(w)t \equiv x(w,t)$$

$$u(w) = c_0\left(\frac{\gamma+1}{\gamma-1}\left(1+s(w)\right)^{(\gamma-1)/2} - \frac{2}{\gamma-1}\right)$$

Parametric equations:

plot $s(w)$ vs $x(w,t)$ for range of w at each t

More details.

Summary

$$\frac{\partial \rho}{\partial t} + u(\rho)\frac{\partial \rho}{\partial x} = 0$$

Solution: $\rho = \rho_0 + f(x - u(\rho)t) = \rho_0\left(1 + s(x - u(\rho)t)\right)$

For linear case: $u(\rho) = c_0$

For non-linear case: $u(\rho) = c_0\left(\frac{\gamma+1}{\gamma-1}\left(1 + s(x-ut)\right)^{(\gamma-1)/2} - \frac{2}{\gamma-1}\right)$

Plot $s(x-ut)$ for fixed t, as a function of x:

Let $w = x - ut \quad \Rightarrow \quad x = w + ut = w + u(w)t \equiv x(w,t)$

$$u(w) = c_0\left(\frac{\gamma+1}{\gamma-1}\left(1 + s(w)\right)^{(\gamma-1)/2} - \frac{2}{\gamma-1}\right)$$

Parametric equations: plot $s(w)$ vs $x(w,t)$ for range of w

Summary.

Linear wave:

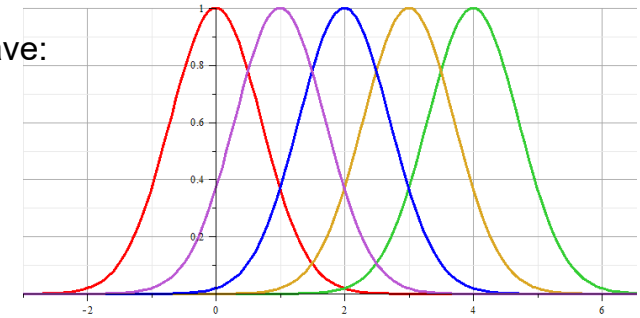

Non-linear wave:

Example visualization.